TEAR SHEET

Walker Grande Offset Chandelier

Item # KS 5073G-L/BL

Designer: kate spade new york

O/A Height: 61.75"
Fixture Height: 18"
Min. Custom Height: 24.25"
Width: 53"
Canopy: 6.5" Round
Finishes: BSL, G, LC
Shade Treatments: L, L/BL, NL
Shade Details: 14" x 14" x 6", 11.5" x 11.5" x 6"
Socket: 18 - E12 Candelabra
Wattage: 18 - 6.5 LED B11
Weight: 25 Pounds

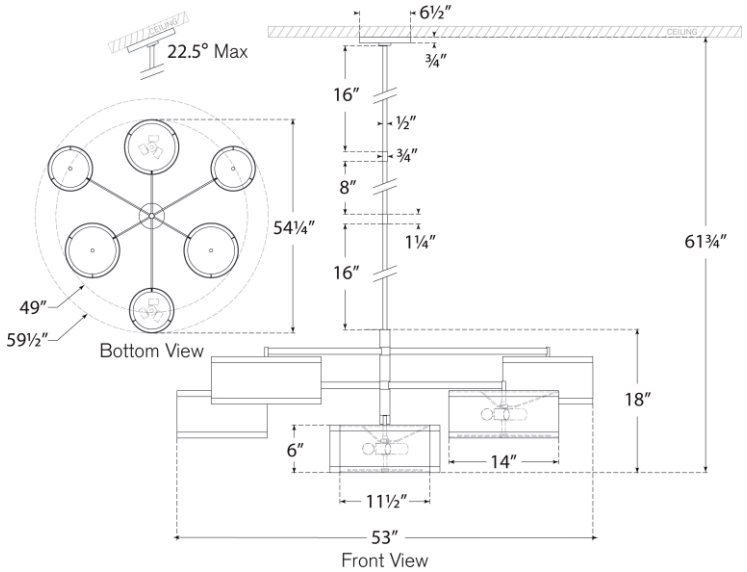

VISUAL COMFORT & CO.